JB EQUIPMENT
INDUSTRY EXPERIENCE SINCE 1985

SYSTEM 800 INSTALLATION GUIDE

Wide span shelving for heavy, hand-loaded storage

Component reference, assembly steps, decking options and final inspection checklist.



Assembled starter bay with step beams

IN THIS GUIDE

1 System overview
2 Components and part numbers
3 Before you start
4 Build the shelving
5 Install the decking
6 Back-to-back rows and add-ons
7 Final inspection and safe use

No bolts

Welded frames and riveted step beams connect without tools or hardware.

Two-person build

One person holds the frame while the other sets the beams.

Three deck choices

Galvanized wire decks, galvanized steel pans or OSB wood decks.

1 System overview

System 800 is a wide span shelving system for medium to heavy hand-loaded storage: cartons, bins, parts, bulky items and long goods. Frames come fully welded, and beams hook into the frame posts, so a bay goes together quickly with two people and no bolts.

- **One-piece welded frames:** 14 ga. roll-formed posts with 14 ga. seamlessly welded tube bracing and welded-on footplates.
- **Step beams:** seamlessly welded, with two rivets on each end plate and a lock pin at each end.
- **Adjustable:** shelf levels adjust on 1½" centres along a tear-drop slot pattern.
- **Finish:** phosphate undercoat with a light grey powder-epoxy finish.
- **Decking:** drop-in galvanized wire decks, 6" galvanized steel pans, or economical cut-to-size OSB wood decks with optional supports.

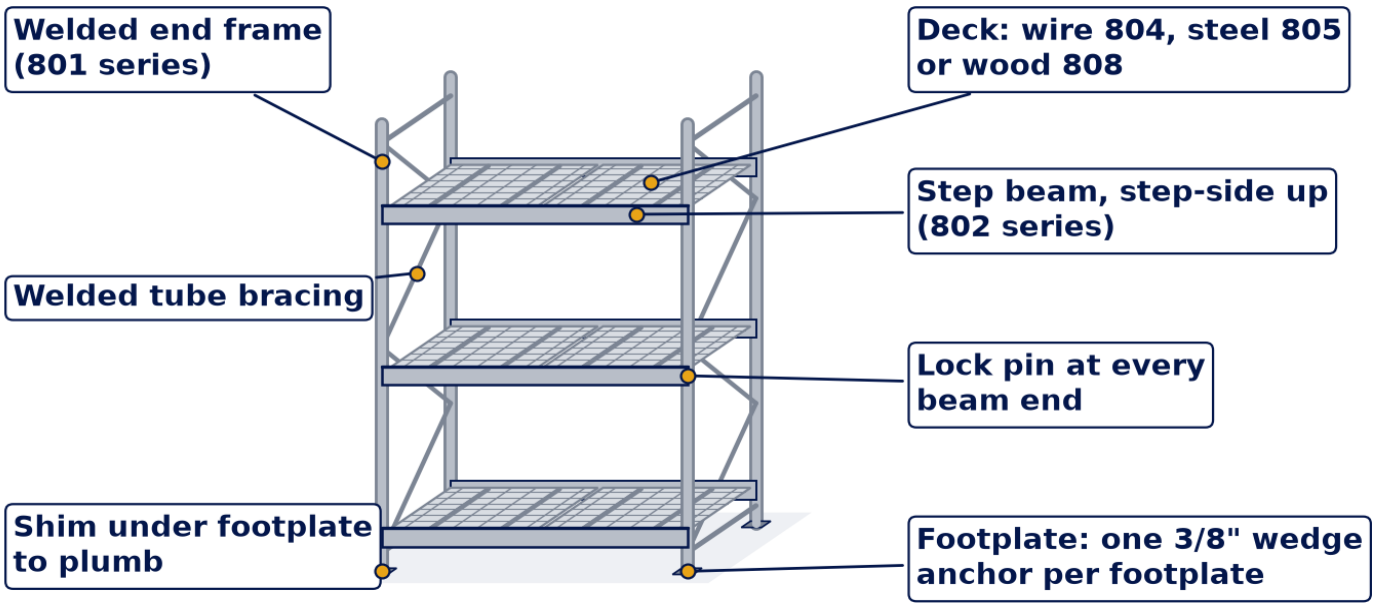

Figure 1. Parts of a System 800 starter bay (shown with wire decks)

2 Components and part numbers

Every component is sold separately, so you can order a complete system or only the parts you need. Use these tables to check your delivery before you start.

Frames (801 series)

One-piece welded frame. Welded footplates for floor anchoring.

Part no.	Depth	Height
801 1872	18"	72"
801 1896	18"	96"
801 18120	18"	120"
801 2472	24"	72"
801 2484	24"	84"
801 2496	24"	96"
801 24120	24"	120"
801 24144	24"	144"
801 3072	30"	72"
801 3096	30"	96"
801 30120	30"	120"
801 3672	36"	72"
801 3696	36"	96"
801 36120	36"	120"

Step beams (802 series)

Two beams per shelf level. 2" and 3" nominal profiles.

Part no.	Width	Profile
802 4802	48"	2"
802 4803	48"	3"
802 7202	72"	2"
802 7203	72"	3"
802 9602	96"	2"
802 9603	96"	3"

Wood supports (807 series)

Extra support under wood decks. Recommended at 30" and 36" depths.

Part no.	Fits frame depth	Thickness
807 24	24"	1"
807 30	30"	1"
807 36	36"	1"

No support is offered for 18"-deep shelving; the shallow depth generally does not need one.

Decking

Deck depth is always 1¾" less than the frame depth so the deck sits inside the beam steps. Match each deck to its frame depth, not to its actual measurement.

Wire decks (804 series)

Galvanized in-step decks, 7 ga. wire, 14 ga. support channels. 24" wide.

Part no.	Frame depth	Deck size
804 18	18"	16¼" x 24"
804 24	24"	22¼" x 24"
804 30	30"	28¼" x 24"
804 36	36"	34¼" x 24"

Steel pans (805 series)

Galvanized 17 ga. drop-in steel panels. 6" wide.

Part no.	Frame depth	Pan size
805 18	18"	16¼" x 6"
805 24	24"	22¼" x 6"
805 30	30"	28¼" x 6"
805 36	36"	34¼" x 6"

OSB wood decks (808 series)

Canadian-made oriented strand board, cut to fit each beam width. One deck per level.

Frame depth	48" beam	72" beam	96" beam	Actual deck size
18"	808 1848	808 1872	808 1896	16¼" x 47½" / 71½" / 95½"
24"	808 2448	808 2472	808 2496	22¼" x 47½" / 71½" / 95½"
30"	808 3048	808 3072	808 3096	28¼" x 47½" / 71½" / 95½"
36"	808 3648	808 3672	808 3696	34¼" x 47½" / 71½" / 95½"

Decks needed per shelf level

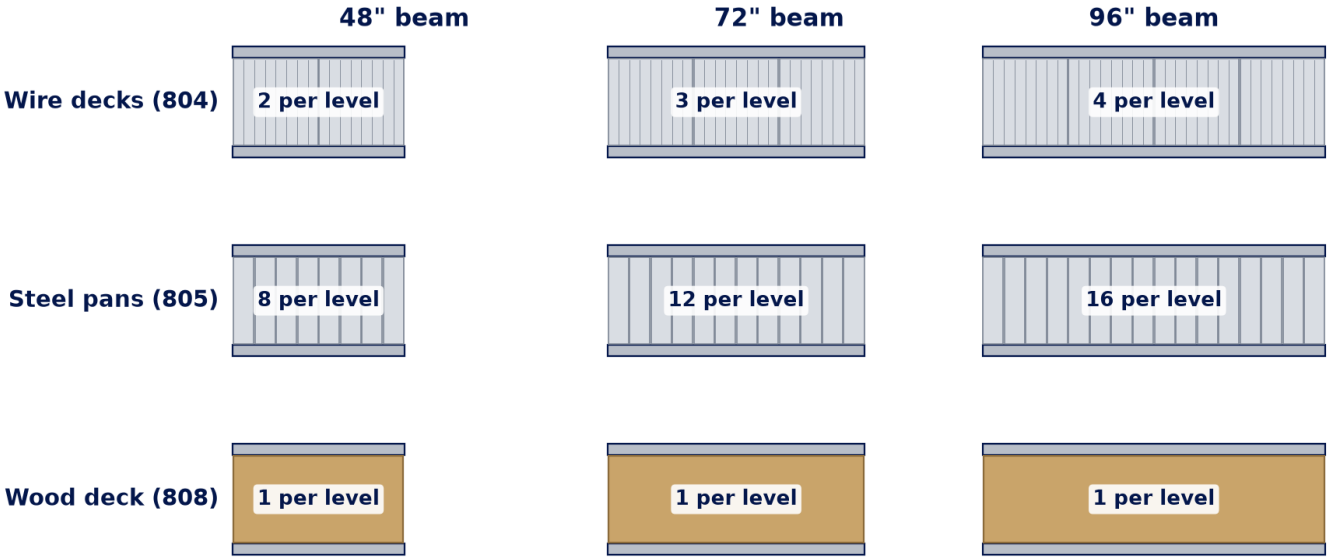

Figure 2. Deck quantities per level by beam width

Installation hardware

Item	Where it goes	Quantity
Lock pins	Through the beam end plate into the post, at every beam end	2 per beam (4 per level)
3/8" wedge anchors	Through each footplate into the concrete slab	1 per footplate (2 per frame)
Shims	Under footplates to plumb and level frames	As needed
4" row connectors	Between back-to-back frames	One every 48" of frame height

3 Before you start

Tools and supplies

Frames and beams connect without tools. You will need tools only for layout and floor anchoring.

- Tape measure and chalk line
- 4 ft level
- Rubber mallet
- Hammer drill with a 3/8" masonry bit
- Hammer and wrench or socket for the anchor nuts
- Shims
- Step ladder for tall frames
- Safety glasses, gloves and safety footwear

Prepare the site

- Confirm the floor is a sound, level concrete slab suitable for anchoring.
- Check for in-floor heating, conduit or other services before drilling.
- Mark the row positions with a chalk line, keeping aisles and exits clear.
- Check overhead clearance to lights, sprinklers, heaters and doors.
- Unpack and count parts against your packing list and the tables in section 2.
- Set aside damaged or bent parts. Do not install them.

CAUTION System 800 is best built with two people. Do not load any shelf until the bay is complete, anchored and every beam is pinned.

Load capacity depends on the beam profile, span, decking and supports used. Confirm the rating for your configuration with JB Equipment before loading.

Know your parts


Welded end frame


Step beams


Lock pin

4 Build the shelving

Every row starts with a starter bay (two frames). Each add-on bay then uses one more frame and shares the frame beside it.

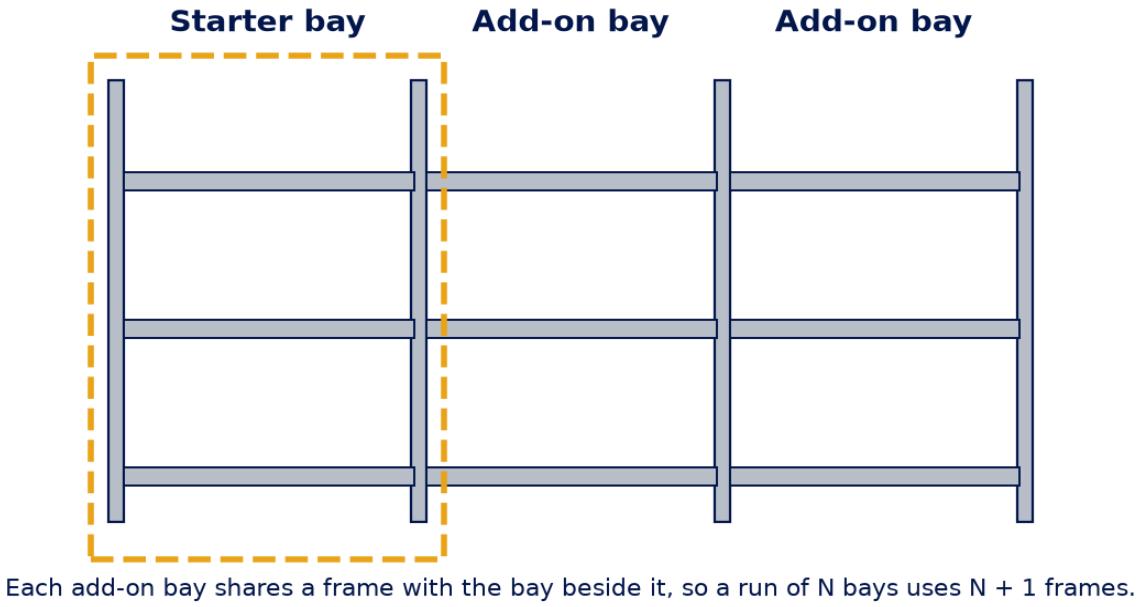

Figure 3. A run of bays built from one starter bay and add-on bays

1 Stand the first frame and connect a low beam

Hold the first frame upright while your helper hooks one beam into the frame towards the bottom. Tap the beam down with a rubber mallet until it is fully seated in the slots.

- **Step-side up:** the beam step (lip) faces up and inwards so the decks can sit in it.
- **Lock pins:** insert a lock pin at every beam end as you go. Never leave a beam unpinned.



First beam connected near the bottom of the frame

2 Add the second frame and fill in the levels

Connect the second frame to the free ends of the beams to form the starter bay. Add the matching front or back beam at the same level, then fill in the remaining beam levels at the heights you need.

- Count the holes from the floor on each post so both beams in a level sit at the same height.
- Keep the lowest beam level in place until the starter bay has been shimmed, squared and anchored.



Starter bay with the bottom beams in place



Beam levels filled in

3 Square, shim and anchor the starter bay

Check the frames for plumb in both directions with a level. Measure the diagonals of the bay; when they match, the bay is square. Shim under the footplates as needed.

- Drill through each footplate and set **one 3/8" wedge anchor per footplate**, following the anchor manufacturer's instructions for hole depth and torque.
- Re-check plumb after tightening the anchors.

4 Build the add-on bays

Hook a beam into the open side of the starter bay at the desired level, then connect the next frame in the series. Fill in the remaining levels, pin every beam, then shim and anchor the new frame the same way.

Repeat for each bay until the row is complete.



Add-on bay being connected to the starter bay

5 Install the decking

Install decking only after the shelving is fully built, anchored and pinned. All three deck types sit inside the beam steps; no fasteners are required.

5

Drop in the decks

Wire decks (804)

- Lower each deck into the front and back beam steps with the support channels running front to back.
- Use 2 decks on a 48" beam, 3 on a 72" beam and 4 on a 96" beam. Butt them side by side with no gaps or overlaps.

Galvanized steel pans (805)

- Drop the 6" pans into the beam steps one at a time, working from one end of the bay to the other.
- Use 8 pans on a 48" beam, 12 on a 72" beam and 16 on a 96" beam to close the shelf completely.

OSB wood decks (808)

- For 30" and 36" depths, and wherever extra support is specified, set the 807 wood supports front to back across the beam steps first, spaced evenly along the bay.
- Lay one wood deck per level into the beam steps, on top of any supports.



Wire deck being dropped into the beam steps

TIP Not sure which surface to choose? Wire decks keep stock visible and let light and air through; steel pans give a solid metal shelf for small items; OSB is the most economical surface.

6 Back-to-back rows and add-ons

6 Connect back-to-back rows

When two rows stand back to back, tie the adjoining frames together with 4" row connectors.

- Install one row connector every 48" of frame height.
- Keep both rows aligned and anchored at every footplate.



Row connector, lock pins, 3/8" wedge anchors and shims

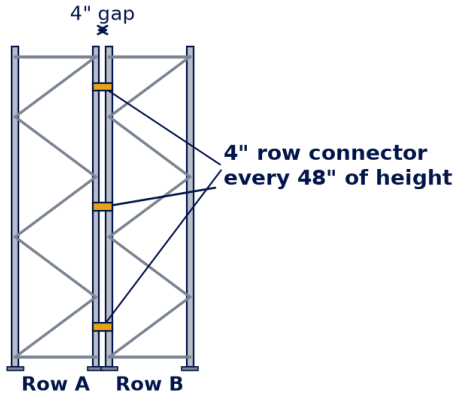

Side view, back-to-back rows

Figure 4. Back-to-back rows with 4" row connectors

Changing shelf heights

- Unload and remove the decking from the level first.
- Remove the lock pins, lift the beam out of the slots, and reset it at the new height. Levels adjust on 1½" centres.
- Reinstall the lock pins before replacing the decking.
- Do not remove the lowest beam level of any bay; it helps keep the frames square.

Tire storage

System 800 makes a practical tire rack using 18"-deep frames. Tires stand upright, side by side, on the beam levels rather than being stacked flat. Send JB Equipment the tire sizes and quantities, and we will recommend a suitable configuration.

Adding to existing shelving

Before adding parts to an existing installation, confirm the frame depth, beam connection and deck sizes match. Send photos and measurements to JB Equipment rather than assuming similar-looking parts are interchangeable.

7 Final inspection and safe use

Inspection checklist

Check every item before the shelving is put into service.

- ☐ Every frame is plumb, and every bay is square.
- ☐ Every footplate is shimmed as needed and anchored with a 3/8" wedge anchor.
- ☐ Every beam is installed step-side up and fully seated in the post slots.
- ☐ A lock pin is installed at every beam end.
- ☐ Both beams in each level are at the same height.
- ☐ Decks are fully seated in the beam steps, with the correct quantity per level and no gaps.
- ☐ Wood supports are installed where specified (30" and 36" depths recommended).
- ☐ Back-to-back rows are joined with 4" row connectors every 48" of height.
- ☐ No damaged, bent or missing parts.

Safe use

- Load shelves evenly across the deck, with the heaviest items on the lowest levels.
- Never exceed the rated capacity for your configuration. Confirm it with JB Equipment if you are unsure.
- Do not climb on the shelving or stand on beams or decks.
- Remove the load before adjusting any shelf level.
- Inspect the shelving regularly. Unload and replace any damaged frame, beam or deck before reuse.

Questions, missing parts or need it installed?

JB Equipment supplies and installs System 800 shelving across the GTA and southern Ontario, and ships supply-only orders across Canada.

(905) 883-0316 · info@jbequipment.ca · jbequipment.ca

3-50 East Beaver Creek Rd., Richmond Hill, ON L4B 1G6 · Since 1985